GEOMETRIC SHEET METAL
AND AIR CONDITIONING
A.B.N. 15 466 144 848
A, 19-21, 1 Campbell Parade, Manly Vale, 2093 NSW
Phone: (02) 9948 5740 Fax:(02) 9949 3242

Company: Contact: Phone:

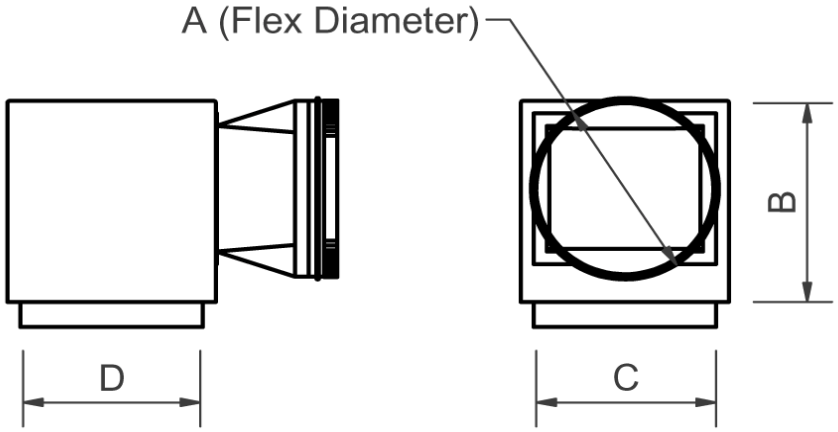

Plenum Box				
Flexible Duct Size	Box Height	Grille Neck		Number Required
		Width	Depth	
A	B	C	D	