GEOMETRIC SHEET METAL
AND AIR CONDITIONING
A.B.N. 15 466 144 848
A, 19-21, 1 Campbell Parade, Manly Vale, 2093 NSW
Phone: (02) 9948 5740 Fax:(02) 9949 3242

Company: Contact: Phone:

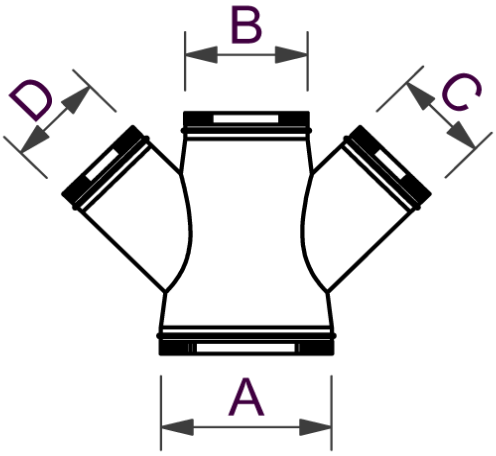


| Double Branch Takeoff | | | | |
|---|---|---|---|---|
| Flexible Duct Size | | | | Number Required |
| Inlet | Outlet | Branch 1 | Branch 2 | |
| A | B | C | D | |
| | | | | |
| | | | | |
| | | | | |
| | | | | |
| | | | | |
| | | | | |
| | | | | |
| | | | | |
| | | | | |
| | | | | |
| | | | | |
| | | | | |
| | | | | |
| | | | | |
| | | | | |
| | | | | |
| | | | | |
| | | | | |

GEOMETRIC SHEET METAL
AND AIR CONDITIONING
A.B.N. 15 466 144 848
A, 19-21, 1 Campbell Parade, Manly Vale, 2093 NSW
Phone: (02) 9948 5740 Fax:(02) 9949 3242

Company: Contact: Phone:

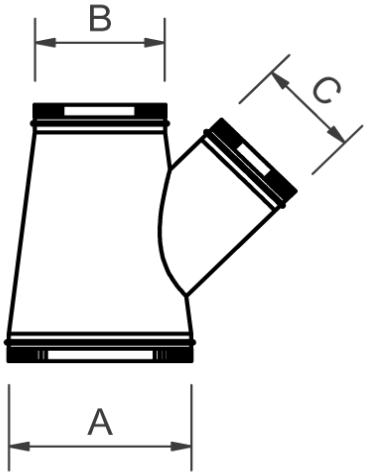


| Single Branch Takeoff | | | |
|---|---|---|---|
| Flexible Duct Size | | | Number |
| Inlet | Outlet | Branch | |
| A | B | C | |
| | | | |
| | | | |
| | | | |
| | | | |
| | | | |
| | | | |
| | | | |
| | | | |
| | | | |
| | | | |
| | | | |
| | | | |
| | | | |
| | | | |
| | | | |
| | | | |
| | | | |
| | | | |

GEOMETRIC SHEET METAL
AND AIR CONDITIONING
A.B.N. 15 466 144 848
A, 19-21, 1 Campbell Parade, Manly Vale, 2093 NSW
Phone: (02) 9948 5740 Fax:(02) 9949 3242

Company: Contact: Phone:

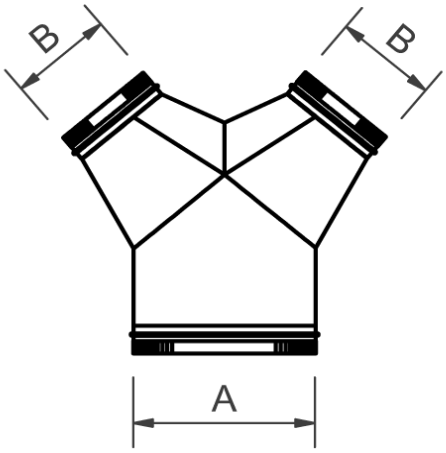


| "Y" Piece | | |
|---|---|---|
| Flexible Duct Size | | Number |
| Inlet | Outlet | |
| A | B | |
| | | |
| | | |
| | | |
| | | |
| | | |
| | | |
| | | |
| | | |
| | | |
| | | |
| | | |
| | | |
| | | |
| | | |
| | | |
| | | |