GEOMETRIC SHEET METAL
AND AIR CONDITIONING
A.B.N. 15 466 144 848
A, 19-21, 1 Campbell Parade, Manly Vale, 2093 NSW
Phone: (02) 9948 5740 Fax:(02) 9949 3242

Company: _____ Contact: _____ Phone: _____

Filter Boxes

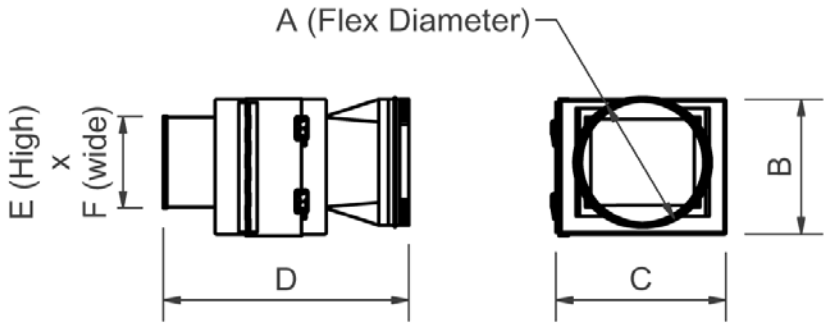

Single Flexible Connection and Slide										
Suggested Air Flow (L/s) Range	Spigot		Filter Box			Slide Connection		Filters		Number Required
	No. Off	Size A	Height B	Width C	Depth D	Max E	Max Width F	No. Off	Size	
125-170	1	200	339	339	500	294	294	1	289 x 289 x 45	
125-170	1	250	339	339	500	294	294	1	289 x 289 x 45	
255-340	1	300	393	545	500	348	500	1	343 x 495 x 45	
255-340	1	350	393	545	500	348	500	1	343 x 495 x 45	
295-395	1	350	445	545	500	400	500	1	395 x 495 x 45	
295-395	1	400	445	545	500	400	500	1	395 x 495 x 45	
370-495	1	400	445	672	500	400	627	1	395 x 622 x 45	
370-495	1	450	445	672	500	400	627	1	395 x 622 x 45	
Custom									x x	
Custom									x x	
Custom									x x	
Custom									x x	
Custom									x x	
Custom									x x	
Custom									x x	
Custom									x x	
Custom									x x	
Custom									x x	
Custom									x x	

GEOMETRIC SHEET METAL
AND AIR CONDITIONING
A.B.N. 15 466 144 848
A, 19-21, 1 Campbell Parade, Manly Vale, 2093 NSW
Phone: (02) 9948 5740 Fax:(02) 9949 3242

Company: _____ Contact: _____ Phone: _____

Filter Boxes

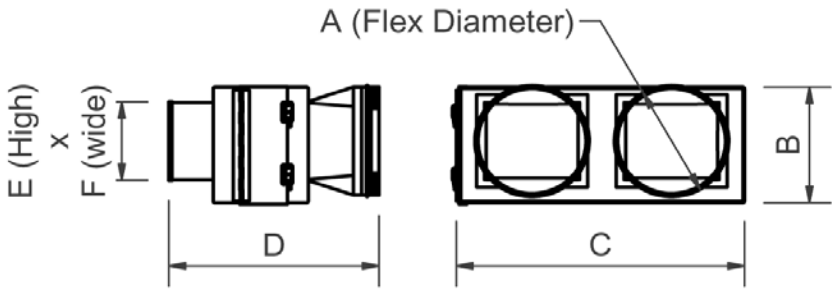

Dual Flexible Connections and Slide														
Suggested Air Flow (L/s) Range	Spigot		Filter Box			Slide Connection		Filters						Number Required
	No. Off	Size A	Height B	Width C	Depth D	Max E	Max Width F	No. Off	Size					
510-680	2	350	393	1040	500	348	995	2	343	x	495	x	45	
510-680	2	400	393	1040	500	348	995	2	343	x	495	x	45	
470-625	2	300	445	840	500	400	795	2	395	x	395	x	45	
470-625	2	350	445	840	500	400	795	2	395	x	395	x	45	
590-785	2	350	445	1040	500	400	995	2	395	x	495	x	45	
590-785	2	400	445	1040	500	400	995	2	395	x	495	x	45	
700-935	2	400	440	1246	500	395	1201	2	390	x	598	x	45	
700-935	2	450	440	1246	500	395	1201	2	390	x	598	x	45	
765-1020	2	400	393	1535	500	348	1490	3	343	x	495	x	45	
880-1175	2	450	445	1535	500	400	1490	3	395	x	495	x	45	
Custom														
Custom														
Custom														
Custom														
Custom														
Custom														
Custom														
Custom														
Custom														