GEOMETRIC SHEET METAL AND AIR CONDITIONING

A.B.N. 15 466 144 848
A, 19-21, 1 Campbell Parade, Manly Vale, 2093 NSW
Phone: (02) 9948 5740 Fax:(02) 9949 3242

Company: _____ Contact: _____ Phone: _____

Filter Boxes

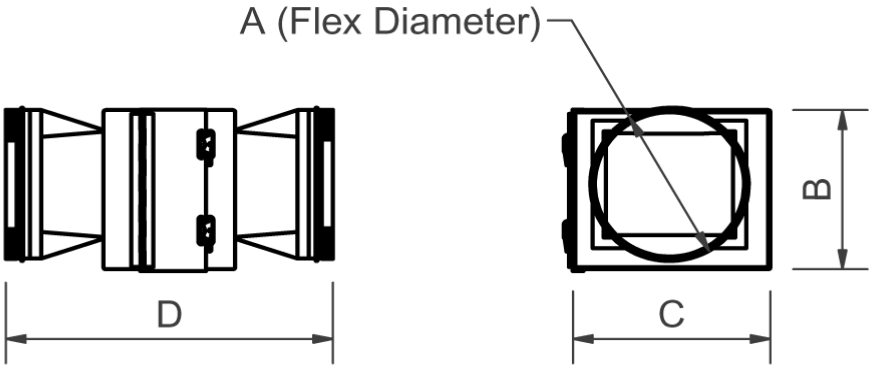

Single Flexible Connection, Both Sides								
Suggested Air Flow (L/s) Range	Spigot		Filter Box			Filters		Number Required
	No. Off	Size A	Height B	Width C	Depth D	No. Off	Size	
125-170	1	250	339	339	500	1	289 x 289 x 45	
125-170	1	300	339	339	500	1	289 x 289 x 45	
255-340	1	350	393	545	500	1	343 x 495 x 45	
255-340	1	400	393	545	500	1	343 x 495 x 45	
295-395	1	350	445	545	500	1	395 x 495 x 45	
295-395	1	400	445	545	500	1	395 x 495 x 45	
370-495	1	400	445	672	500	1	395 x 622 x 45	
370-495	1	450	445	672	500	1	395 x 622 x 45	
Custom								
Custom								
Custom								
Custom								
Custom								
Custom								
Custom								
Custom								
Custom								
Custom								

GEOMETRIC SHEET METAL AND AIR CONDITIONING

A.B.N. 15 466 144 848
A, 19-21, 1 Campbell Parade, Manly Vale, 2093 NSW
Phone: (02) 9948 5740 Fax:(02) 9949 3242

Company: _____ Contact: _____ Phone: _____

Filter Boxes

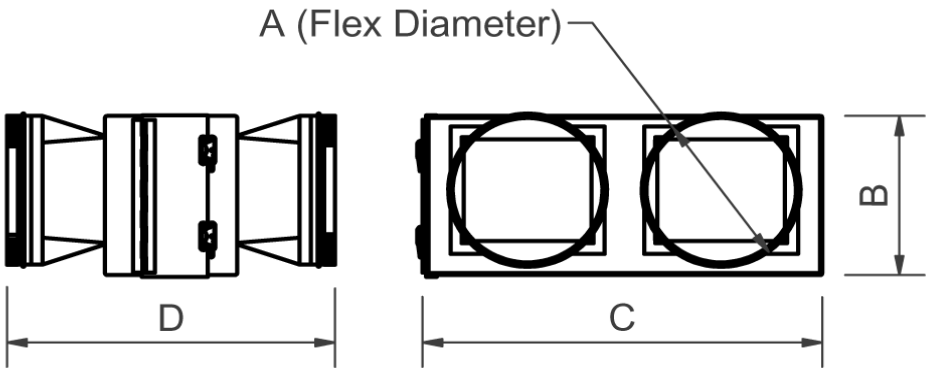

Dual Flexible Connections, Both Sides								
Suggested Air Flow (L/s) Range	Spigot		Filter Box			Filters		Number Required
	No. Off	Size	Height	Width	Depth	No. Off	Size	
		A	B	C	D			
510-680	2	350	393	1040	500	2	343 x 495 x 45	
510-680	2	400	393	1040	500	2	343 x 495 x 45	
470-625	2	300	445	840	500	2	395 x 395 x 45	
470-625	2	350	445	840	500	2	395 x 395 x 45	
590-785	2	350	445	1040	500	2	395 x 495 x 45	
590-785	2	400	445	1040	500	2	395 x 495 x 45	
700-935	2	400	440	1246	500	2	390 x 598 x 45	
700-935	2	450	440	1246	500	2	390 x 598 x 45	
765-1020	2	400	393	1535	500	3	343 x 495 x 45	
880-1175	2	450	445	1535	500	3	395 x 495 x 45	
Custom								
Custom								
Custom								
Custom								
Custom								
Custom								
Custom								
Custom								