GEOMETRIC SHEET METAL
AND AIR CONDITIONING
A.B.N. 15 466 144 848
A, 19-21, 1 Campbell Parade, Manly Vale, 2093 NSW
Phone: (02) 9948 5740 Fax:(02) 9949 3242

Company: _____ Contact: _____ Phone: _____

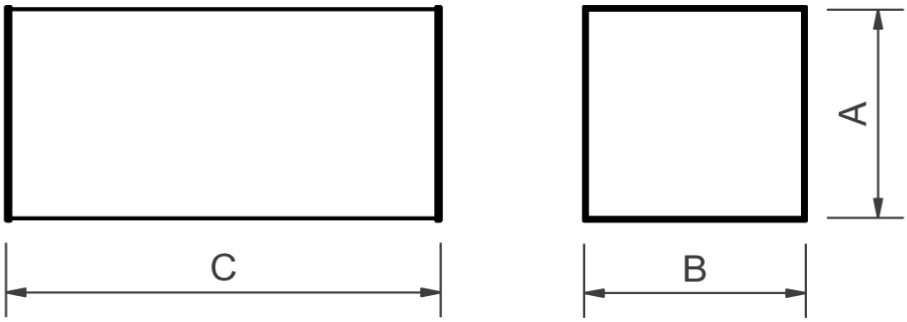

Straight Duct						
Duct Size			Joint Type		Stop End One End	Number Required
Height	Width	Length	Slide	Rolled Flange		
A	B	C				

GEOMETRIC SHEET METAL AND AIR CONDITIONING

A.B.N. 15 466 144 848
A, 19-21, 1 Campbell Parade, Manly Vale, 2093 NSW
Phone: (02) 9948 5740 Fax:(02) 9949 3242

Company: _____ Contact: _____ Phone: _____

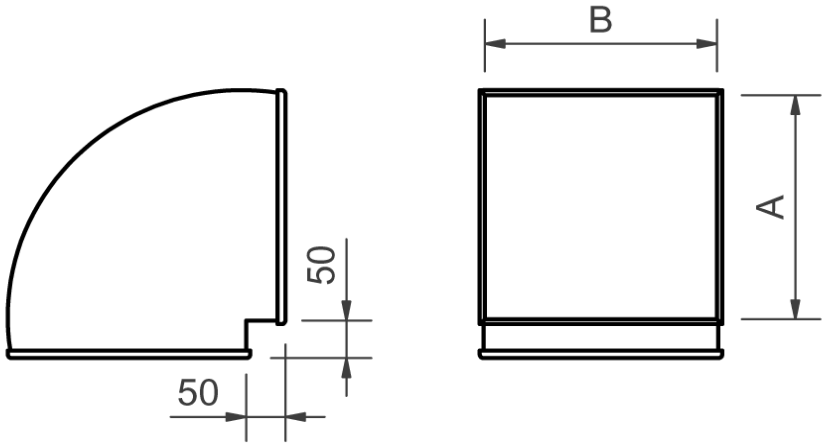

Bends				
Duct Size		Joint Type		Number Required
Height A	Width B	Slide	Rolled Flange	

GEOMETRIC SHEET METAL AND AIR CONDITIONING

A.B.N. 15 466 144 848
A, 19-21, 1 Campbell Parade, Manly Vale, 2093 NSW
Phone: (02) 9948 5740 Fax:(02) 9949 3242

Company: _____ Contact: _____ Phone: _____

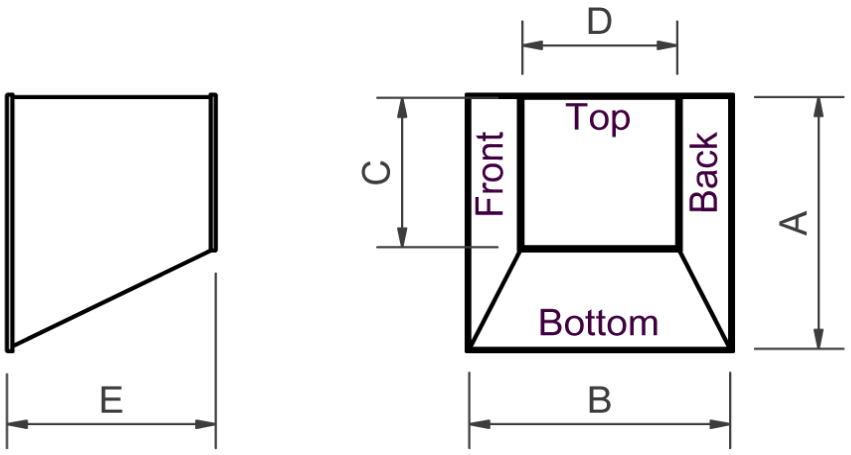

Transitions

Inlet Duct Size		Outlet Size				Joint Type		Number Required
Height	Width	Height	Width	Length			Rolled	
A	B	C	D	E	Flat On	Slide	Flange	