GEOMETRIC

GEOMETRIC SHEET METAL AND AIR CONDITIONING

A.B.N. 15 466 144 848

A, 19-21, 1 Campbell Parade, Manly Vale, 2093 NSW

Phone: (02) 9948 5740 Fax:(02) 9949 3242

Company: Contact: Phone:

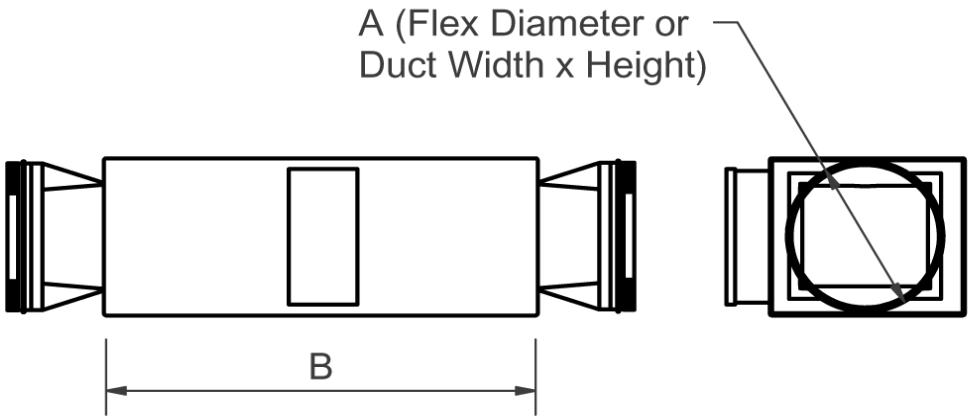

Duct Heaters					
Air Flow L/s	Duct Size Flexible Dia or Width x Height A	Length B	Heater Size KW	Single or Three Phase	Number Required